121

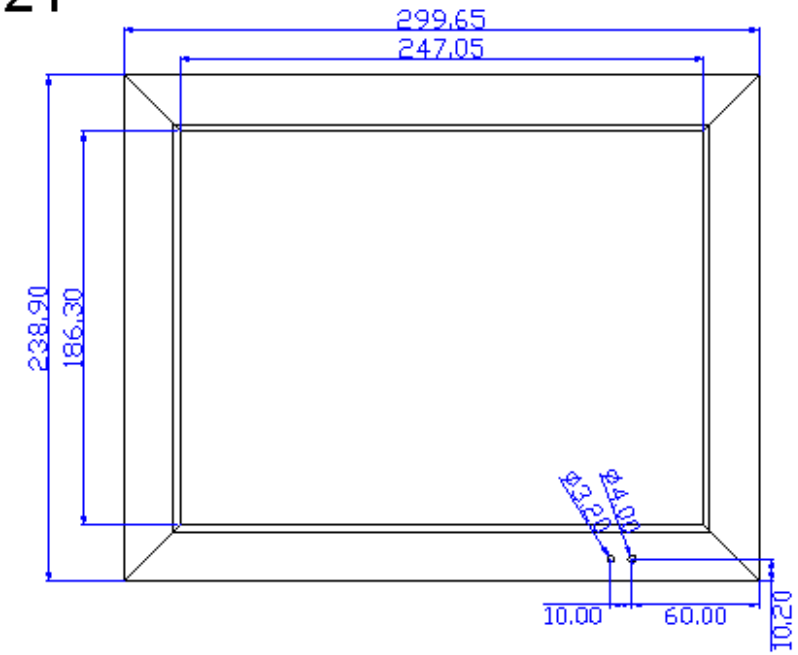

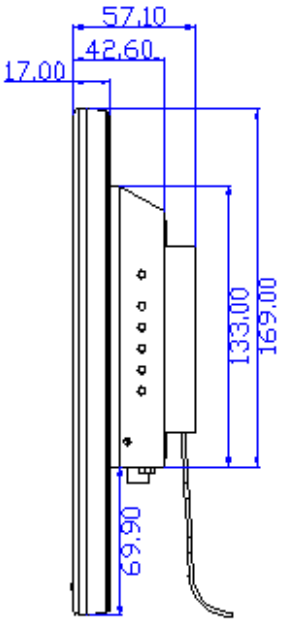

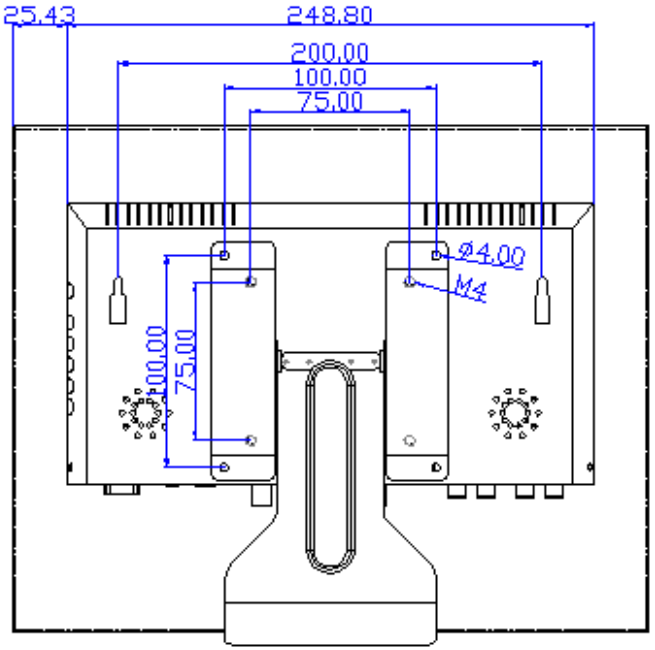

Line Drawing for:
Model No. LCD121AVL
All sizes are in mm

Psi

Product Shop International Ltd.
Po Box 5503, Newbury, Berkshire, RG14 YP, UK.
Tel: +44 (0) 844 800 4433 e-mail: sales@productshop.co.uk
Fax: +44 (0) 844 800 9876 Web site: www.productshop.co.uk