121

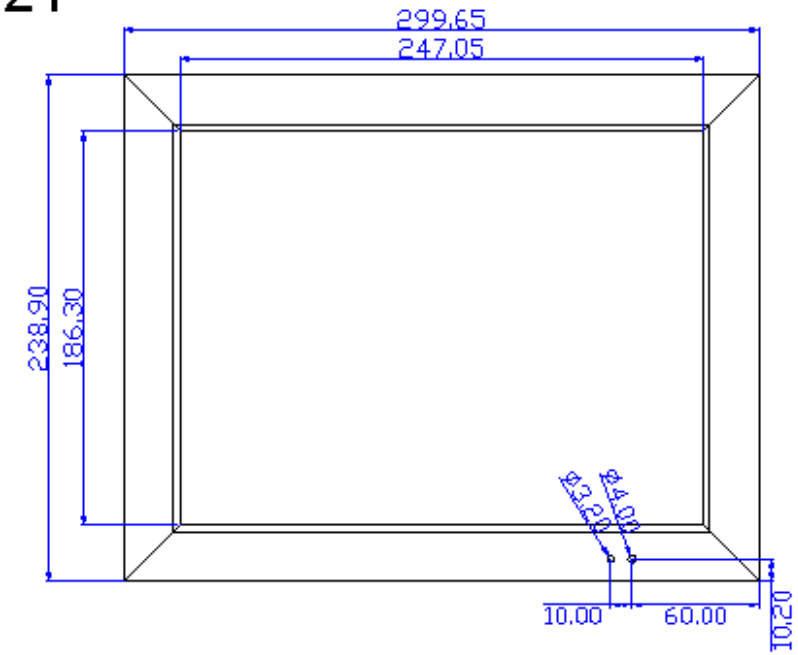

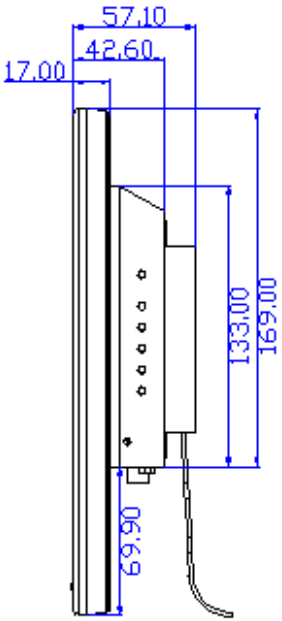

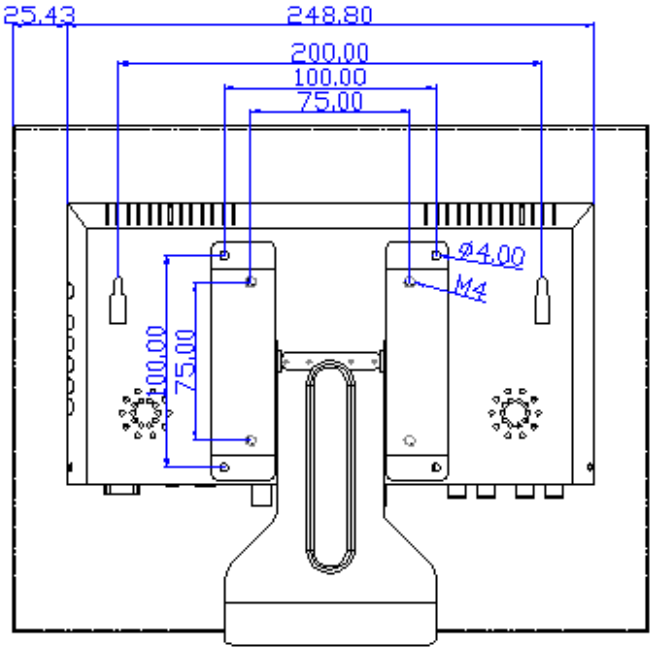

Line Drawing for:
Model No. LCD121AV
All sizes are in mm

Psi

Product Shop International Ltd.
Po Box 5503, Newbury, Berkshire, RG14 6RB, UK.
Tel: +44 (0) 8708 50 55 55 e-mail: sales@productshop.co.uk
Fax: +44 (0) 8708 50 55 44 Web site: www.productshop.co.uk